12. Să se conecteze 2 minitastaturi cu câte 12 contacte la o unitate centrală cu microprocesorul 8086.

Rezolvare:

Schema:

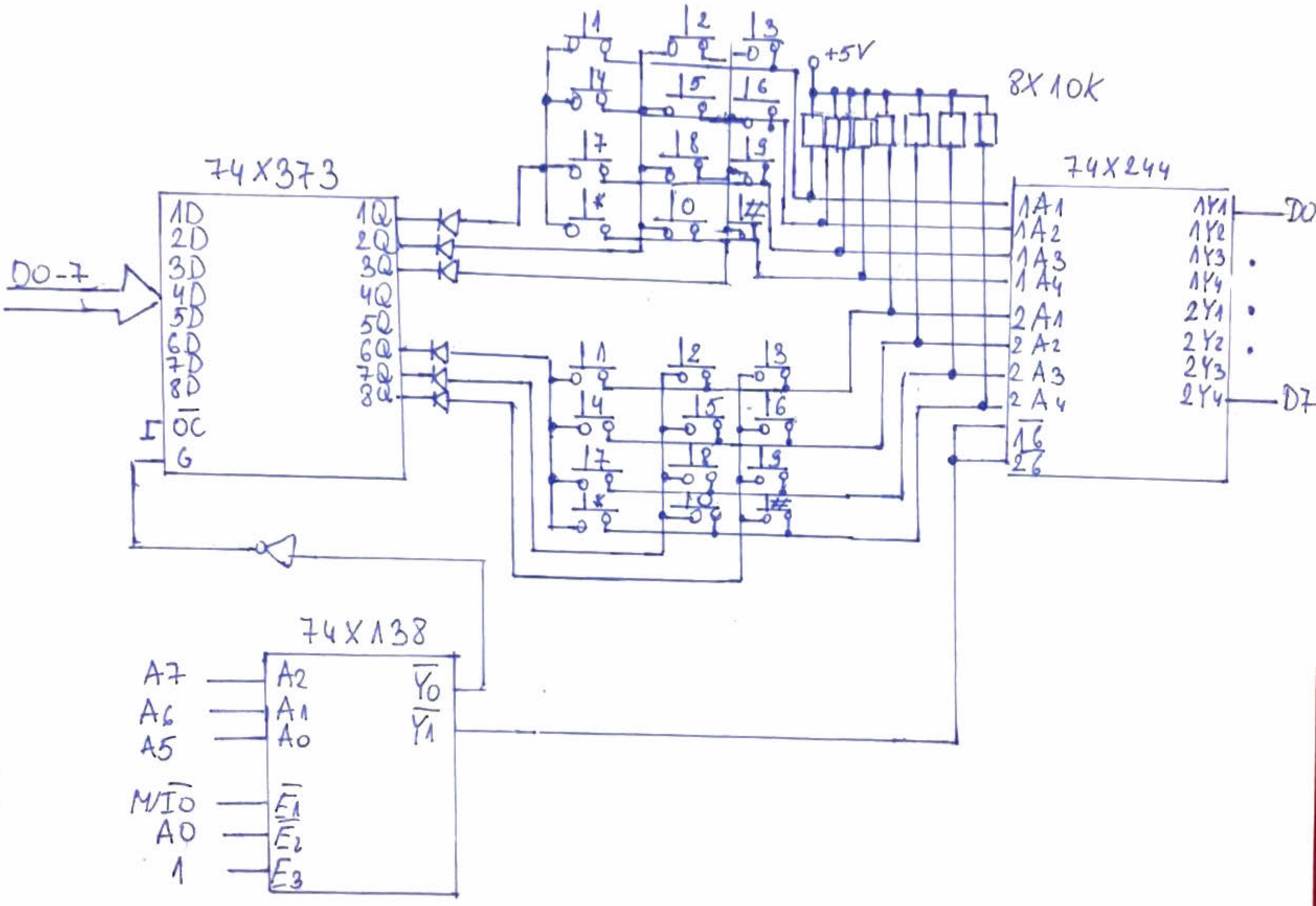
74X373
D0-7
1D
2D
3D
4D
5D
6D
7D
8D
OC
G
1Q
2Q
3Q
4Q
5Q
6Q
7Q
8Q
+5V
8X10K
74X244
1A1
1A2
1A3
1A4
2A1
2A2
2A3
2A4
1Y1
1Y2
1Y3
1Y4
2Y1
2Y2
2Y3
2Y4
D0
D7
74X138
A7
A6
A5
M/IO
A0
1
A2
A1
A0
E1
E2
E3
Y0
Y1

Programul:

```
; coloana 1, tastatura 1
REIA: MOV AL, 0EFH; 11101111₂
OUT 00H, AL; 0 pe prima coloană
IN AL, 20H; tastatura 1 se citește
AND AL, 10H; 00010000₂
JZ TASTA11
IN AL, 20H
AND AL, 20H; 00100000₂
JZ TASTA14
IN AL, 20H
AND AL, 40H; 01000000₂
JZ TASTA17
IN AL, 20H
AND AL, 80H; 10000000₂
JZ TASTA1*
; coloana 2, tastatura 2
MOV AL, 0DFH; 11011111₂
OUT 00H, AL; 0 pe coloana a doua
IN AL, 20H; tastatura 1 se citește
AND AL, 10H; 00010000₂
JZ TASTA12
IN AL, 20H
AND AL, 20H; 00100000₂
JZ TASTA15
IN AL, 20H
AND AL, 40H; 01000000₂
JZ TASTA18
IN AL, 20H
AND AL, 80H; 10000000₂
JZ TASTA10
```

; coloana 3, tastatura 1

```
MOV AL, 0BFH; 10111111₂
OUT 00H, AL; 0 logic pe coloana 3
IN AL, 20H; citește 1 tastatură
AND AL, 10H; 00010000₂
JZ TASTA13
IN AL, 20H
AND AL, 20H; 00100000₂
JZ TASTA15
IN AL, 20H
AND AL, 40H; 01000000₂
JZ TASTA18
IN AL, 20H
AND AL, 80H; 10000000₂
JZ TASTA1#
```

; coloana 1, tastatura 2

```
MOV AL, 0FEH; 11111110₂
OUT 00H, AL; 0 logic pe prima coloană
IN AL, 20H; citește 2 tastatură
AND AL, 01H; 00000001₂
JZ TASTA21
IN AL, 20H
AND AL, 02H; 00000010₂
JZ TASTA24
IN AL, 20H
AND AL, 04H; 00000100₂
JZ TASTA27
IN AL, 20H
AND AL, 08H; 00001000₂
JZ TASTA2*
```

+5V

; coloana 2, tastatura 2

```
MOV AL, 0FDH; 11111101₂
OUT 00H, AL; 0 logic pe a doua coloană
IN AL, 20H; citește 2 tastatură
AND AL, 01H; 00000001₂
JZ TASTA22
IN AL, 20H
AND AL, 02H; 00000010₂
JZ TASTA25
IN AL, 20H
AND AL, 04H; 00000100₂
JZ TASTA28
IN AL, 20H
AND AL, 08H; 00001000₂
JZ TASTA20
```

; coloana 3, tastatura 2

```
MOV AL, 0FBH; 11111011₂
OUT 00H, AL; 0 logic pe a treia coloană
IN AL, 20H; citește 2 tastatură
AND AL, 01H; 00000001₂
JZ TASTA23
IN AL, 20H
AND AL, 02H; 00000010₂
JZ TASTA26
IN AL, 20H
AND AL, 04H; 00000100₂
JZ TASTA29
IN AL, 20H
AND AL, 08H; 00001000₂
JZ TASTA2#
JP REIA
```

```
TASTA11: CALL TIM; oprirea vibrațiilor -> așteptare
TAST11: IN AL,20H
AND AL,10H
JZ TAST11; dezactivarea tastei
CALL TIM; oprirea vibrațiilor
JP REIA

...
...
...

TASTA1#: CALL TIM
TAST1#: IN AL,20H
AND AL,80H
JZ TAST11
CALL TIM
JP REIA

TASTA21: CALL TIM
TAST21: IN AL,20H
AND AL,01H
JZ TAST21
CALL TIM
JP REIA

...
...
...

TASTA2#: CALL TIM
TAST2#: IN AL,20H
AND AL,08H
JZ TAST21
CALL TIM
JP REIA
```